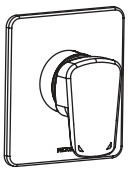

INSTALLATION GUIDE

AXISS FUSION PLUS SHOWER MIXER AXFSPCSMC

FELTON

SYSTEM REQUIREMENTS

	MINIMUM		MAXIMUM
Unequal Pressure - Venturi jet installed Operating Pressures	Hot	Cold	1500kPa (217.6psi)
	36kPa (5.1psi)	200kPa (29.0psi)	
Equal High (Mains) & Equal Low Pressures - Venturi jet removed Operating Pressures	36kPa (5.1psi)		1500kPa (217.6psi)
Operating Hot Water Temperatures	55° C		60° C
Operating Cold Water Temperatures	5° C		N/A

⚠ Do not plug outlet when testing.

⚠ This shower mixer can be line tested up 1500kPa (217.6psi)

⚠ AS/NZS 3500.1 states that pressures above 500 kPa can cause damage from water hammer, reduce the life of appliances, taps & fittings, cause excessive noise in the system and recommend that a pressure limiting valve (PLV) be fitted.

WHAT IS IN THE PACK

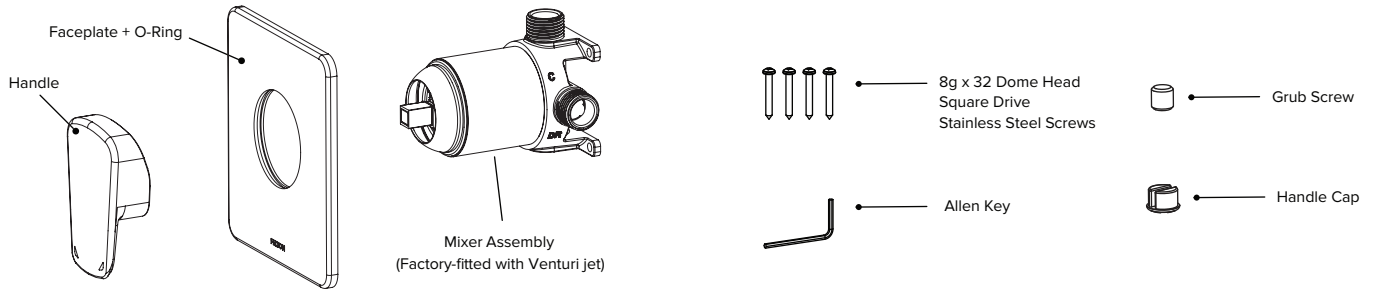

! BEFORE INSTALLATION

Pipework MUST be purged before connecting to the mixer

! MIXER ORIENTATION

This mixer is designed to be connected with the hot water supply on the left only and the cold water supply on the right only.

If at any point the nut is removed, please ensure that both black lines marked on the cartridge and cartridge nut are aligned when the mixer is in full cold position as shown in figure 1.

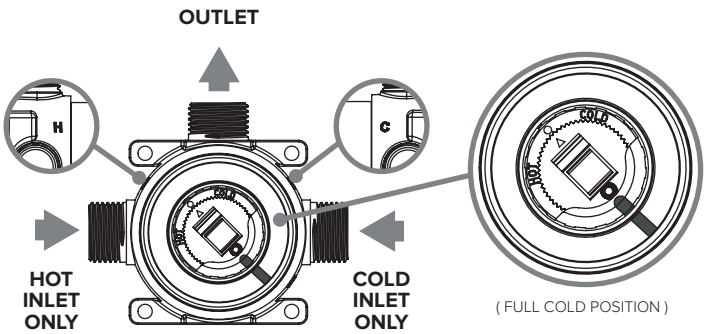

Figure 1.

FELTON

IF YOU HAVE...

UNEQUAL PRESSURE

Install product as supplied (factory fitted with Fusion Plus Venturi Jet)

EQUAL LOW PRESSURE OR EQUAL HIGH/MAINS PRESSURE

1. Remove brass insert disc using long nose pliers by carefully inserting the nose of the pliers into the indicated hole A & B.

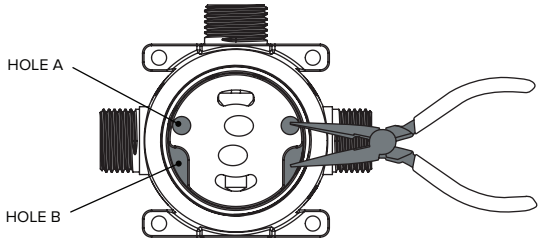

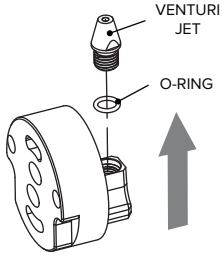

2. Using an 8mm spanner, remove the fitted Venturi jet and o-ring from the brass insert

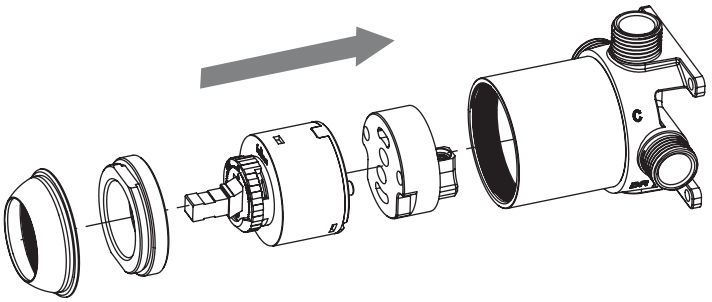

3. Refit the brass insert disc using the long nose pliers.

4. Reassemble mixer. Ensure that both black lines marked on the cartridge and cartridge nut are aligned when the mixer is in full cold position as shown in figure 1.

HOW TO INSTALL

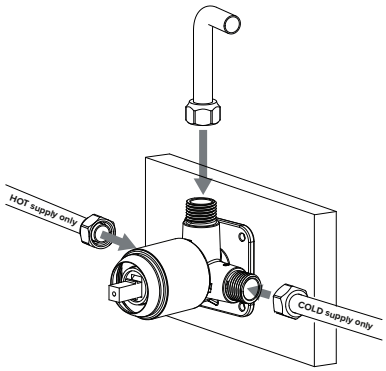

1.

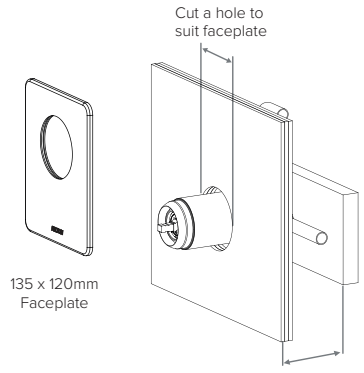

2.

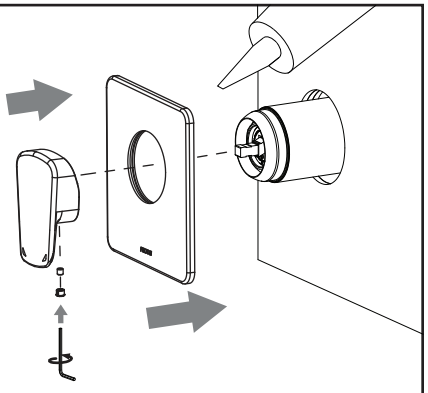

3. Apply a silicone bead on the back of the faceplate

Warranty, Maintenance and Care YOUR COPY TO KEEP

FELTON

Felton Industries Limited guarantees these mixers to be free from defects in materials and workmanship for a period of ten (10) years from the date of purchase. Fair wear and tear is expressly excluded. This warranty is effective for 10 years from the date of purchase for the supply of replacement parts (only) and 5 years from the date of purchase for plumber's labour relating solely to repairing or replacing the mixer, provided the product is installed by a registered plumber. You must retain proof of purchase of the Mixer (such as an invoice or receipt) and proof of installation by a registered plumber and provide these to Felton on request. This warranty is for manufacturing defects only and does not cover any damage to the product due to abuse, negligence or improper installation. This warranty is given on the understanding that the product is installed by a registered plumber and operated according to Felton's installation guide and the Australian/New Zealand standard AS/NZS3500. This warranty is provided to persons who are a "consumer" under the Consumer Guarantees Act 1993 only and for use in domestic/residential dwellings only (not for commercial use).

At no stage should any surface coatings be cleaned with cleaning agents that contain a corrosive acid or a scouring additive. Surface coatings should be cleaned with liquid detergent or soap and water. Any damage caused through the use of an unsuitable cleaner will not be covered by this warranty. This warranty is subject to any other rights or remedies that you may have under the Consumer Guarantees Act 1993 (or any other applicable legislation) and to Felton's Terms of Trade.

Please fill in the details below, attach your receipt to this installation guide and keep as your proof of purchase.

Purchased at: .....

Date of purchase: .....

Installed by: .....

FELTON

Lifetime Warranty Extension Care YOUR COPY TO KEEP

Thank you for purchasing a Felton Product for your home.
Felton stand behind our products and wish to provide you with the warranty set out overleaf. In order to obtain a Lifetime Extension Warranty to the standard warranty, please read and follow the terms and conditions of your warranty (on reverse). This warranty is subject to, and in addition to, your rights at law (including under the Consumer Guarantees Act 1993).
IMPORTANT: Please keep this warranty and complete the details below for your own records. Keep this with your original purchase documents for any claim under warranty. If you have any queries or require further information on your Felton product, please phone (0800 743 358) or refer to details on the back of this card.

Lifetime Extension Warranty - Domestic/Residential

This warranty is given on the understanding that the product is installed and operated according to the installation guide provided and the Australian/New Zealand standard AS/NZS3500, by a registered plumber.
Subject to any other rights or remedies that you may have under the Consumer Guarantees Act 1993 (or any other applicable legislation). Felton Industries Limited agrees to either repair or replace (at Felton's sole discretion) the Mixer (as defined below) if it is discovered that the Mixer contains a material defect which arose in the course of its manufacture, on and subject to the Terms and Conditions set out below.

What Lifetime Extension Warranty does cover:
1) This warranty extension applies in respect of Felton sink, basin and shower mixing valves ("Mixer") which are used in residential/domestic installations only.
2) This warranty is for the lifetime of the first registered owner of the residential dwelling in which the Mixer is installed and who completes this warranty card and is not transferable to any subsequent owner of the dwelling (subject to paragraph 5 under 'What Lifetime Extension Warranty does not cover).
3) This warranty extension covers the repair or replacement only of Mixer parts for a lifetime period provided that you register the purchase and installation of the Mixer with Felton by returning this warranty card to us within 6 months from the date of purchase.
4) This warranty extension covers labour relating solely to repairing or replacing the Mixer for a period of 5 years from the date of purchase, provided the product is installed by a registered plumber in accordance with Felton's installation instructions and the Australian/New Zealand standard AS/NZS3500 and you return this warranty card to us within 6 months from the date of purchase.

Please fill in the details below, attach your receipt to this installation guide and keep as your proof of purchase.

Purchased at: .....

Date of purchase: .....

Installed by: .....

What Lifetime Extension Warranty does not cover:
1) This warranty extension does not apply to shower hoses, Designer wall sets, and shower heads nor does it apply to the Feltonmix range of products.
2) This warranty will be null and void unless the Mixer is installed by a registered plumber in accordance with Felton's installation instructions. A registered plumber is a person registered as a registered plumber with the NZ Plumber Gasfitters and Drainlayers Boar
3) This warranty is for manufacturing defects only and the Mixer must not have been damaged by misuse, accident or neglect. Fair wear and tear is expressly excluded.
4) This warranty is provided to persons who are a "consumer" under the Consumer Guarantees Act 1993 and for use in domestic/ residential dwellings in New Zealand only, not for commercial use. It is not transferable and shall apply to the first registered owner of the Mixer only.
5) Notwithstanding point 4. above, where the Mixer has been purchased and installed in a residential dwelling by a party that has constructed that dwelling with the intention of sale, this warranty will apply to the first occupier of that home (but shall not apply to any subsequent occupiers of that home).
6) Where Felton elects, in its sole discretion, to provide you with a replacement Mixer the cost of freight will be met by you.
7) In order for the Lifetime Extension Warranty to apply, you must complete the registration form and return this warranty card to Felton within 6 months from the date of purchase of the Mixer.
8) All repair work covered by this warranty must be performed by an authorised Felton Service Partner, Felton staff member or, provided that approval is first obtained from Felton and an authorisation number is provided to you by Felton, a certified plumber. The Mixer must not have been tampered with or repaired in any other way other than in accordance with these Terms and Conditions.
9) Product purchased before 1st of April 2014 is not covered by this warranty.

For details on Felton products or services please call us on 0800 743 358 or visit us online at www.felton.co.nz
NOTE: Service charges may be incurred if warranty conditions are not met.

Lifetime Extension Warranty

FELTON

Customer Registration details
Thank you for purchasing a Felton Product for your home.
Felton stand behind our products and wish to provide you with the warranty set out below. This warranty is subject to, and in addition to, your rights at law (including under the Consumer Guarantees Act 1993).
Thank you for taking the time to fill in this warranty form and sending it off to us.

Personal Information*
Title: Mr Mrs Ms Miss
First name: ..... Surname: .....
Customer/Installation Address: .....
.....
Suburb: ..... City: .....
Contact No: (home) .....
(work) .....
(mobile) .....
Email: .....

House builder's information*
N.B. Please complete this section only if you have purchased a new home from a house builder.
Company name: .....
Location: .....
Date of Purchase: .....

Signature: .....

Installing Plumber's information*
First Name ..... Surname: .....
Registration Number: .....
Date of Installation: .....
Please ensure that you attach proof of installation by a registered plumber (i.e. an invoice or receipt from the registered plumber).

Purchase information*
Product Purchased: .....
Product Name/Code: .....
Please ensure that you attach proof of purchase (i.e. copy of invoice or receipt).

I confirm that the details set out are correct (and that I have included proof of purchase and installation as requested above) and acknowledge that the warranty is subject to the Terms and Conditions provided (including Felton's Terms of Trade).

Signature: .....

Survey Section
Gender
☐ Male ☐ Female

Age group
☐ Under 20 ☐ 20-29 ☐ 30-39
☐ 40-49 ☐ 50-59 ☐ 60+

Q1. What was the main reason for your choice of this particular model?
☐ Design ☐ Price ☐ Features/benefits
☐ Brand ☐ Advertising ☐ Recommendation
☐ Warranty terms ☐ Easy to use ☐ Quality

Q2. What are some other Plumbing brands that you previously owned?
.....
.....

☐ Please tick if you are happy to be contacted in the future with information about product support, new product information, special offers or the opportunity to provide feedback. I understand Felton Industries Limited will retain the information I have provided, but will not disclose any personal information to any third party.

Thank you for taking the time to fill in this warranty form.
Please send it off to:

Felton Industries LTD
8 Farmhouse Lane
Glen Innes
Auckland 1072

*** Mandatory fields**