LE·VIVI

Toilet Seats

LEVIVI BROOKLYN

LeVivi Brooklyn Soft Close Seat

SKU: LEVBROSEAT

- Soft close, quick-release seat
- Suits Brooklyn toilet suites
- Polypropylene seat
- Bottom fixing

SPARES	CODE
Hinge Set	LEV9371015
Buffer Set	LEV213280108

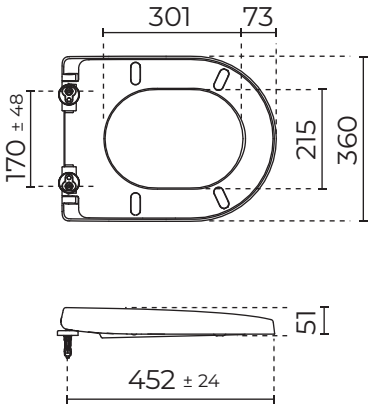

LEVIVI MARBELLA

LeVivi Marbella Soft Close Seat

SKU: LEVMARSEAT

- Soft close, quick-release seat
- Suits Marbella toilet suite
- Polypropylene seat
- Concealed fixing

SPARES	CODE
Buffer Set	LEV213280108

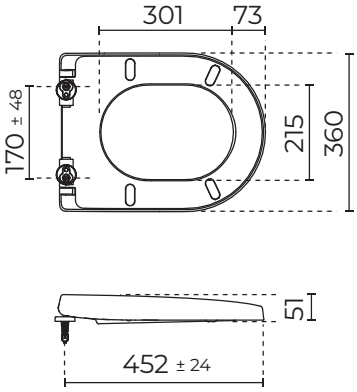

LEVIVI MARBELLA

LeVivi Marbella Slim Soft Close Seat

SKU: LEVMARUFSEAT

- Soft close, quick-release seat
- Suits Marbella toilet suite
- Heavy duty seat
- Concealed fixing
- Slim seat design

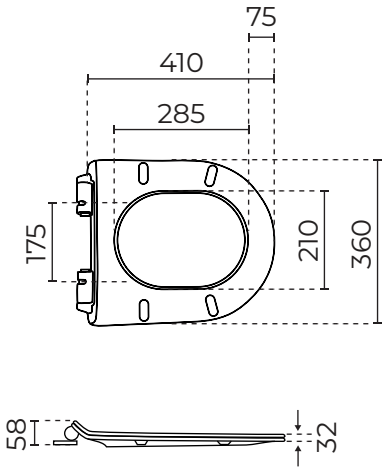

Soft Close seat

Suitable for disabled toilet suites

exclusive to plumbingworld

LE·VIVI

Toilet Seats

LEVIVI INDIANA

LeVivi Indiana Soft Close Seat

SKU: LEVINDSEAT

- Soft close seat
- Suits Indiana pan
- Polypropylene seat
- Bottom fixing

LEVIVI UTAH

LeVivi Utah Soft Close Seat

SKU: LEVUTAHSEAT

- Soft close, quick-release seat
- Suits Utah pan
- Polypropylene seat
- Concealed fixing

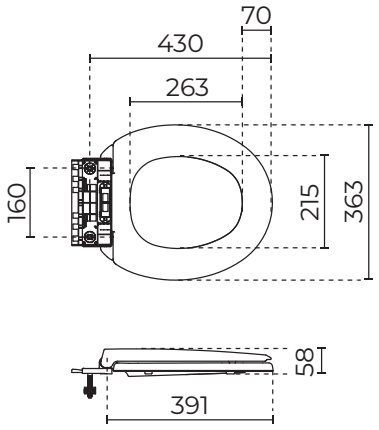

SPARES	CODE
Hinge Set	LEVB1224SHINGE
Buffer Set	LEV213280108

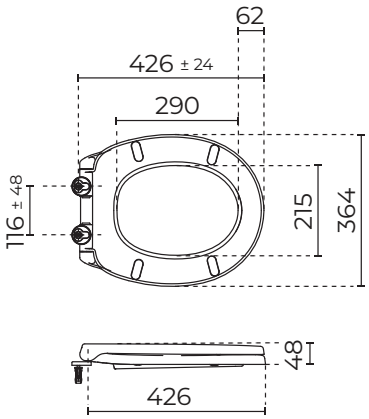

Soft Close seat

Suitable for disabled toilet suites

exclusive to plumbingworld

LE·VIVI

Toilet Seats

LEVIVI YORK

LeVivi York Soft Close Seat

SKU: LEVYORKSEAT

- Soft close, quick-release seat
- Suits York or York Care toilet suite
- Polypropylene seat
- Concealed fixing

SPARES	CODE
Hinge Set	LEV364AQ01
Buffer Set	LEV213280108

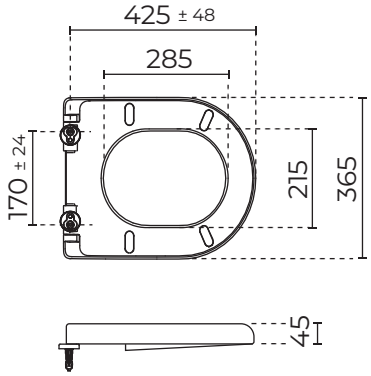

LEVIVI YORK CARE

LeVivi York Care Single Flap Seat

SKU: LEVYORKCSEAT

- Standard close
- Suits York Care or York toilet suite
- Heavy duty seat with concealed fixings
- Single flap (no lid)
- Stainless Steel hinge and rotatable buffers

SPARES	CODE
Buffer Set	LEV213280108

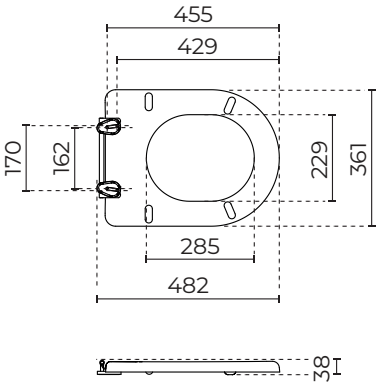

Soft Close seat

Suitable for disabled toilet suites

exclusive to plumbingworld